CODE	DESCRIPTION	POS.	GR.
281205A72	INFERIOR BASIS	1	
279309A72	FRONT WHEEL DIAMETER.35	2	
256764A	SHAFT FOR FRONT WHEEL	3	
276051A	TERMINAL BOX	4	
K210001800A	SOURCE CABLE 3X1	5	
L010002400A	ENSEMBLE COILS	6	
K100017700A	PRESSING PIPE	7	L010002400A
254885B	INDUCTION PIPE	8	L010002400A
254898B	SILENCER PIPE+FILTER+CAPILLARY	9	L010002400A
K070004298A	CONDENSE CONTAINER	10	L010002500A
281148A69	BUOY	11	L010002500A
281249A72	BUOY MOUNT	12	L010002500A
L200000800A	SECCOPUR THERMO S ELECTRONIC PARTS	13	
K200000300A	EVAPORATOR TEMP.PROBE	14	L200000800A
K200000500A	TEMP.\HUM SENSOR BOARD	15	L200000800A
281242B132	BONNET	16	
281243A132	BACK	17	G0368A
K070004979A	SECCOPUR THERMO AIR INDUCTION GRILL	18	G0369A
K070004596A	AIR INDUCTION FILTER	19	
K070004696A	BASKET FOR ACTIVED CARBONS FILTER	20	
K070004700A	ACTIVED CARBONS FILTER	21	
281251B72	SECCOPUR THERMO CENTRAL SUPPORT	22	
281246B72	CONDENSE TANK	23	
281814A72	SECCOPUR THERMO SCROLL	24	
272137B	TOP INSULATOR	25	
276139A	4 POLE MOTOR 2 GEARS	26	
K060000796A	CENTRIFUGAL SUCTION FAN D.160X50	27	
276035A	COMPR.TECUMSEH AZ0411YS (DCAZ-036)	28	
276036A	KLIXON (MOD.T25910 23	29	G0366A
276037A	RELAY (MOD. RP 3715)	30	G0366A
277579A	COVER FOR TERMINAL	31	G0366A
281589A	MONOBODY SHOCK ABSORBER	32	
276009A	MICROSWITCH	35	
281247A72	MICRO-SWITCH SUPPORT	36	
K210000700A	SECCOPUR THERMO HEATING RESISTANCE	37	
K160001500A	SECCOPUR THERMO GENERAL WIRING	38	
K170003100A	SECCOPIU MARK STICKER	39	G0368A
K170005500A	OLIMPIA BRAND BLACK STICKER	40	G0369A
J140004600A	CLIP FOR HOLE D.6.6	41	
G0412A	SECCOPUR THERMO CONTROL BOARD ASSY	43	L200000800A
G0413A	SECCOPUR THERMO POWER BOARD ASSY	44	L200000800A
G0367A	GR.DEW CONTINUE DRAINING	45	
K160002100A	TANK MICROSWITCH CABLE	51	G0413A
L010002500A	WATER CONTAINER GR.	52	

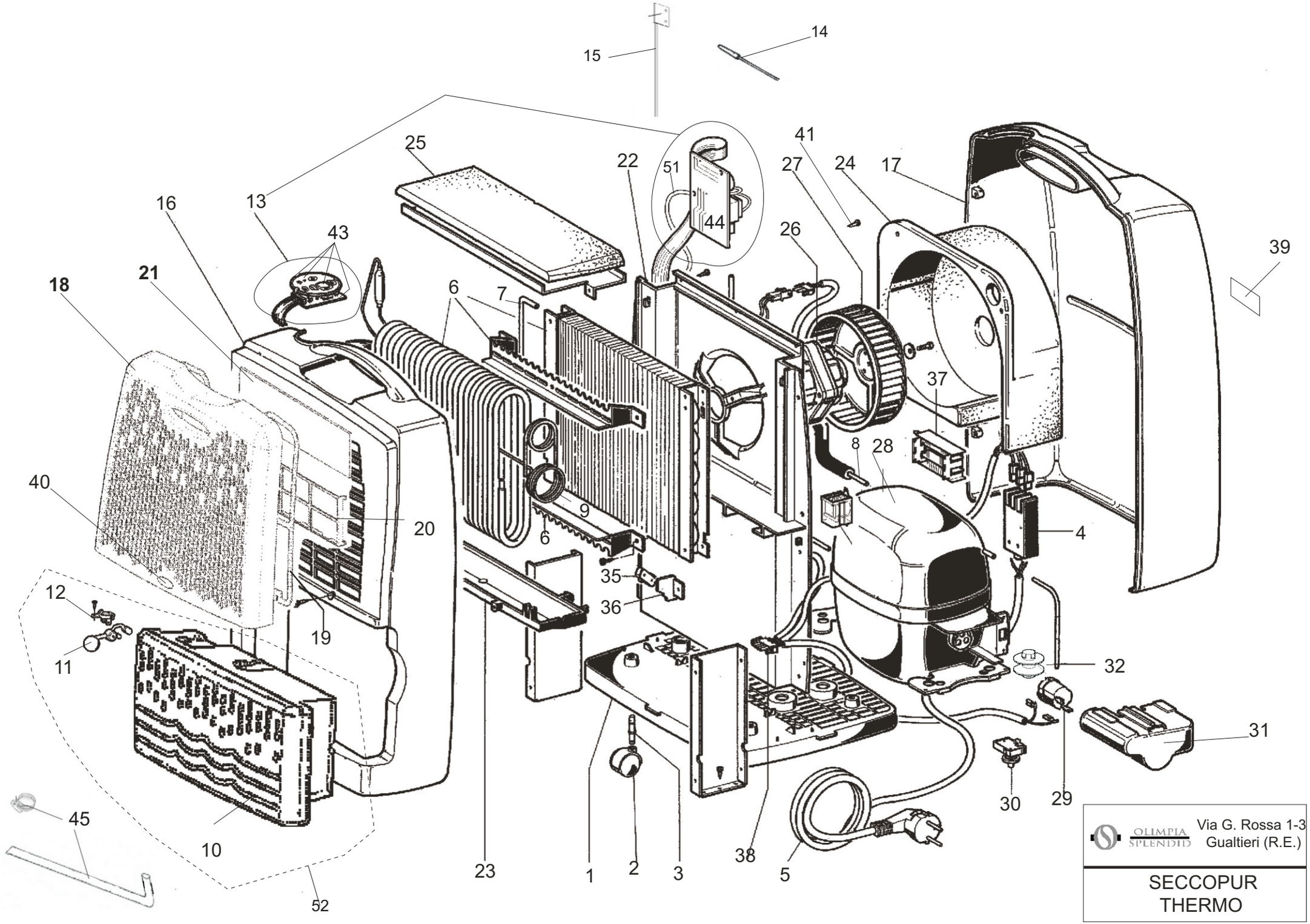

OLIMPIA SPLENDID
Via G. Rossa 1-3
Gualtieri (R.E.)

SECCOPUR
THERMO

Agg. Maggio 2011 - RIF : 075.02